RoHS2.0 Compliant

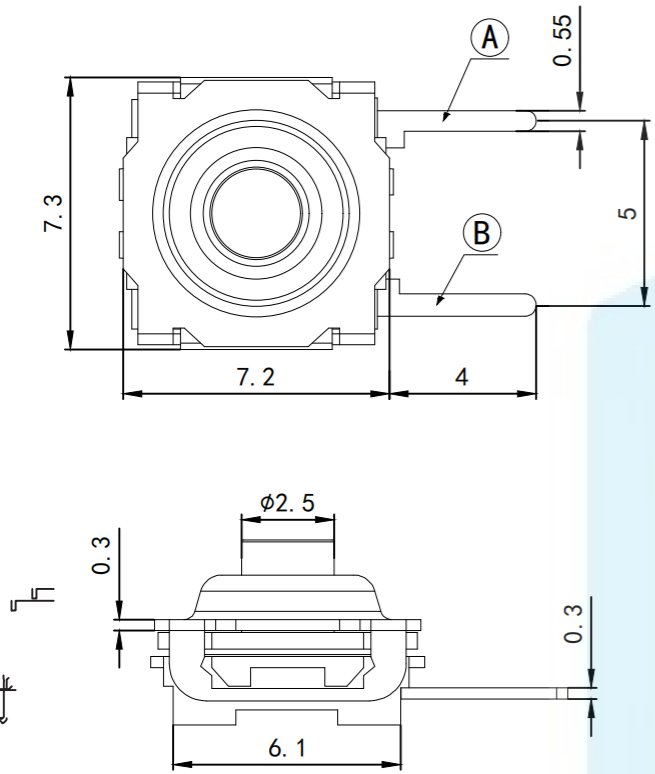

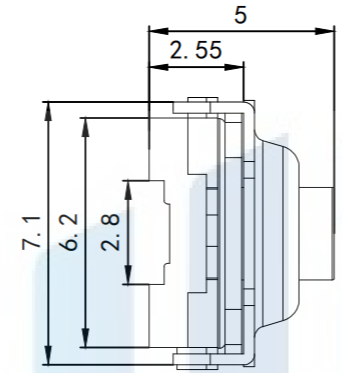

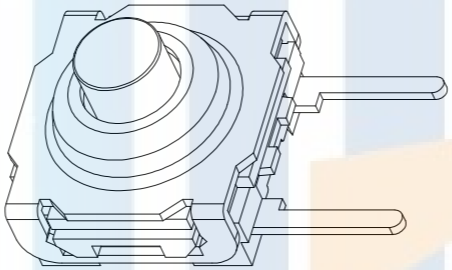

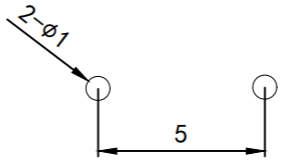

Recommended P.C.B layout

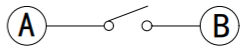

SCHEMATIC

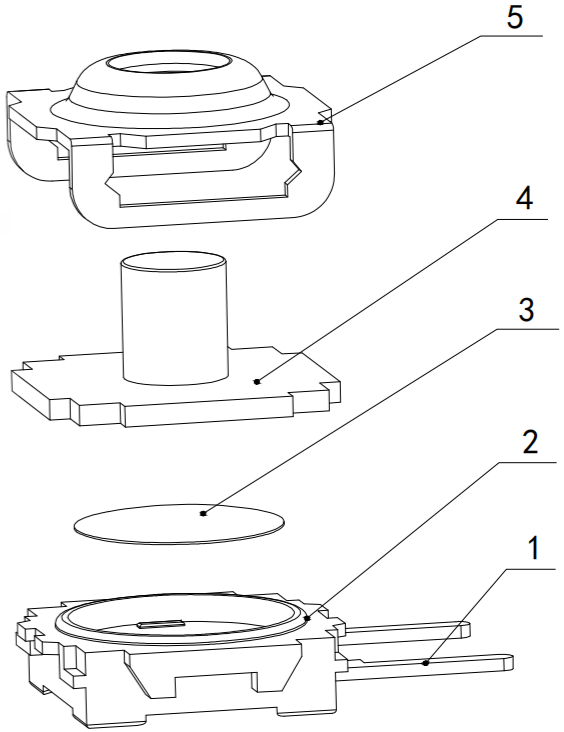

核对

1. Rating:DC12V 50mA.
2. Travel:0.35+0.1mm
3. Operating Force:250+50gf
4. Contact Resistance:100m 2 Max
5. Life:100,000 Cycles Min.

TOLERANCE	
X.XXX	±0.05
X.XX	±0.15
X.X	±0.20
X.	±0.30
ANGLE	±5.0°

PROTECTON

东莞市恒祺电子科技有限公司
Dongguan Hengqi Electronic Technology Co., Ltd

https://www.hq-dz.com phone:15812872448

TITLE: 轻触开关

PART NO:HQ-TS-1009

DRAWING NO:7*7*5边二脚

DRAWN:		DATE:	18-10-08	UNIT: mm
CHECKED:		DATE:	18-10-08	SCALE: FULL
APPROVED:		DATE:	18-10-08	SIZE: A4