RoHS2.0 Compliant

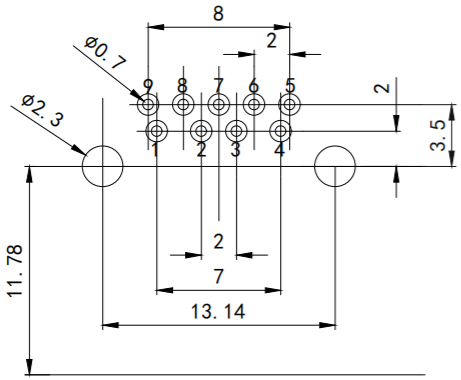

RECOMMENDED PCB LAYOUT
TOLERANCE:±0.05mm

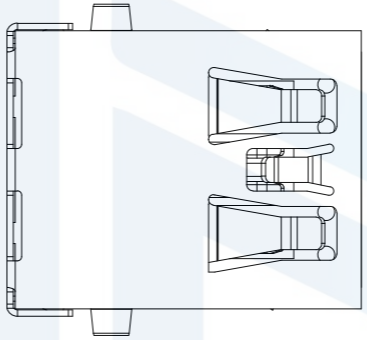

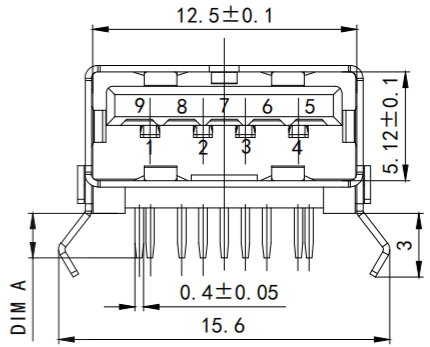

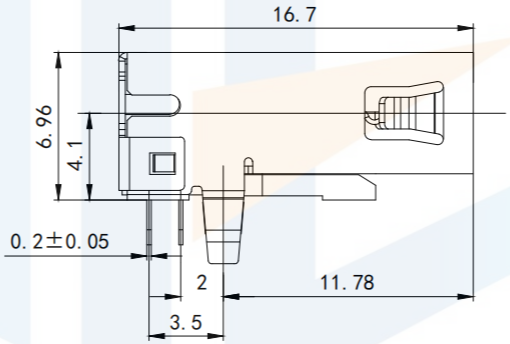

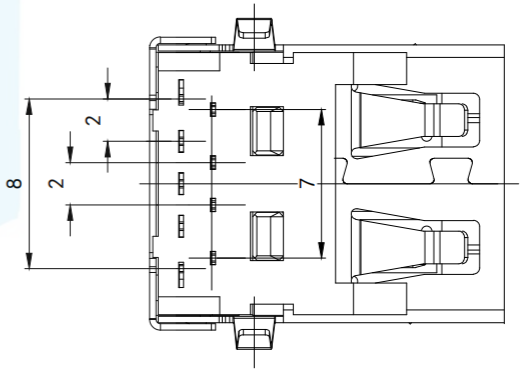

NOTE:
1. MATERIAL:
1.1 INSULATOR:HIGH TEMPERATURE PLASTIC
1.2 CONTACT:BRONZE
1.3 SHELL:BRASS
2. ELECTRICAL CHARACTERISTICS;
2.1 CONTACTRESISTANCE:30mΩ MAX
2.2 CONTACT CURRENT RATING:1.5A
2.3 DIELECTRIC WITHSTANDING VOLTAGE:100 V R.M.S.
2.4 INSULATION RESISTANCE 100 MΩ MIN
2.5 OPERATING TEMPEROTURE:-40° C ～ 85° C
3 MECHANICAL CHARACTERISTICS:
3.1 MATING FORCE:3.57kgf MAX
3.2 UNMATING FORCE:1.02kgf MIN
3.3 DURABILITY:MANDATORY:1,500 CYCLES
4. PLATING
4.1 TERMINAL:
50u" MIN NICKEL ALL OVER
100u"MIN Tin ON SOLDER AREA
(1～30)u"Au ON CONTACT AREA
4.2 SHELL:50u"MIN.NICEL ALL OVER
5. PART NO.

Pin #	SIGNAL NAME
1	VBUS
2	D-
3	D+
4	GND
5	StdA_SSRX-
6	StdA_SSRX+
7	GND_DRAIN
8	StdA_SSTX-
9	StdA_SSTX+
Shell	Shield

TOLERANCE

X.XXX	±0.05
X.XX	±0.15
X.X	±0.20
X.	±0.30
ANGLE	±5.0°

PROTECTON

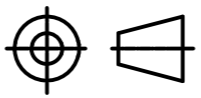

东莞市恒祺电子科技有限公司
Dongguan Hengqi Electronic Technology Co., Ltd

https://www.hq-dz.com phone:15812872448

TITLE:
USB 3.0 A/F板上90度插板
直边2定位脚K脚L=16.7

PART NO:USB3.0-C075

DRAWING NO:16.7*12.5*7

DRAWN:		DATE:	18-10-08	UNIT: mm
CHECKED:		DATE:	18-10-08	SCALE: FULL
APPROVED:		DATE:	18-10-08	SIZE: A4