RoHS2.0 Compliant

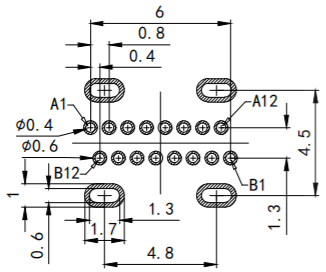

RECOMMEND P.C.B LAYOUT

TOLERANCE UNSPECIFIED ±0.05

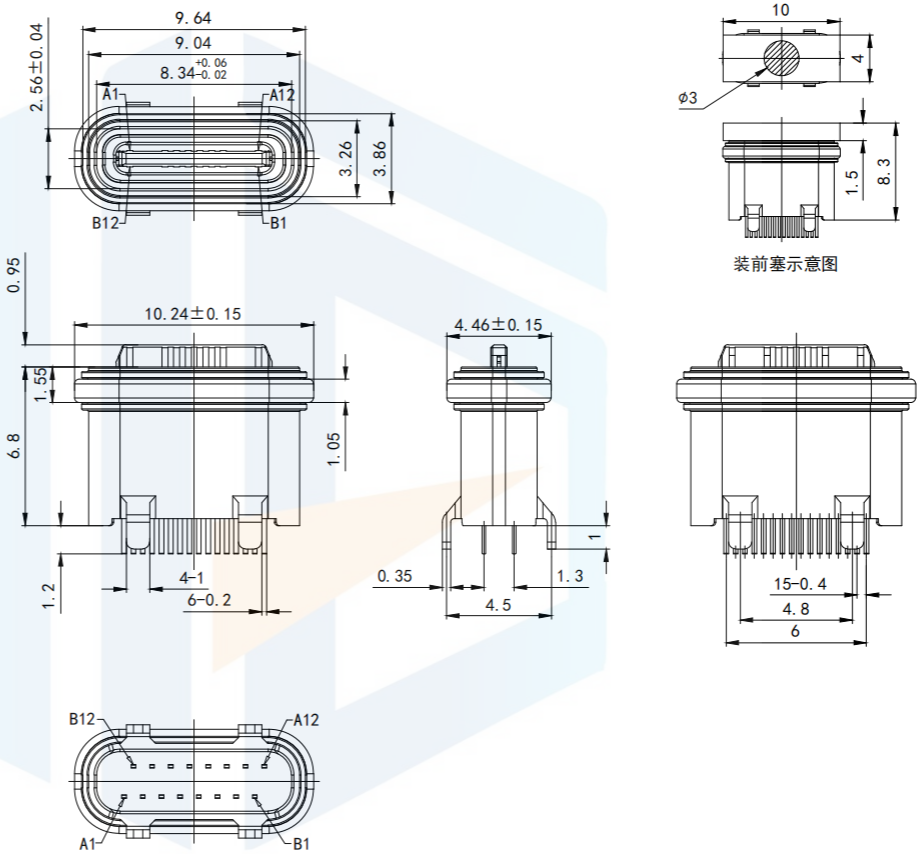

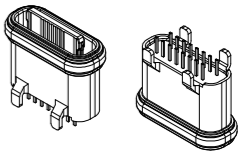

NOTES:

SPECIFICATION:

1. CURRENT RATING: 3.0 A
2. VOLTAGE RATING: 3.0 V
3. VBUS & GND PINS AND OTHER PINS: 40mΩ/PIN MAX
SHIELD: 50mΩ/MAX LLCR MAX. CHANGE OF ALL PINS: 10Ωm
4. INSULATION RESISTANCE: 100MΩ MIN
5. DIELECTRIC WITHSTAND VOLTAGE,AC 100V FOR 1MINUTE
6. LNSERTION FORCE: 0.5~2.0kgf
7. UNMATING FORCE: 0.8-2.0kgf
8. DURABILITY: 10000 CYCLES
9. OPERATING TEMPERATURE: -35° C~+85° C
10. THE PEAK TEMPERATURE ON THE BOARO SHALL BE MAINTAINED FOR 10 SECONDS AT 210-230° C
11. WATERPROOF:IP-X7.

TOLERANCE	
X.XXX	±0.05
X.XX	±0.15
X.X	±0.20
X.	±0.30
ANGLE	±5.0°

PROTECTON

东莞市恒祺电子科技有限公司
Dongguan Hengqi Electronic Technology Co., Ltd

https://www.hq-dz.com phone:15812872448

TITLE:
TYPE C 16P 防水母座立式插板
H=6.8mm粉末冶金

PART NO:TYPE-C16P-LC468FS

DRAWING NO:10.24*4.46*6.8

DRAWN:		DATE:	18-10-08	UNIT: mm
CHECKED:		DATE:	18-10-08	SCALE: FULL
APPROVED:		DATE:	18-10-08	SIZE: A4