RoHS2.0 Compliant

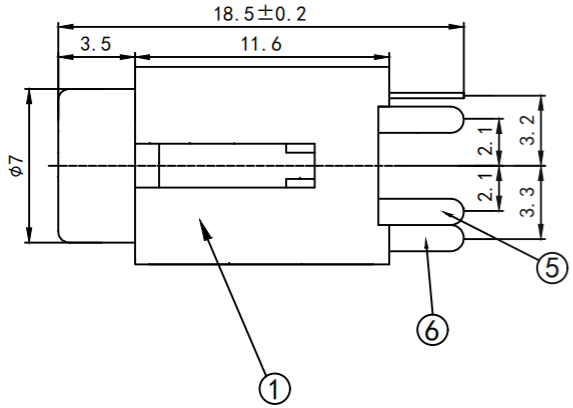

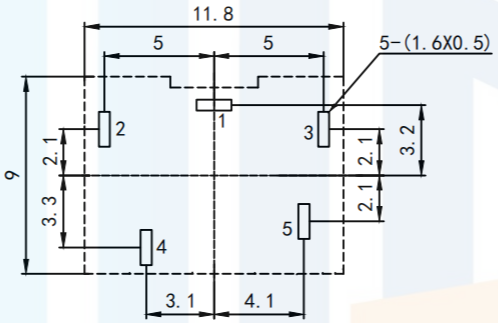

P.C.B LAYOUT

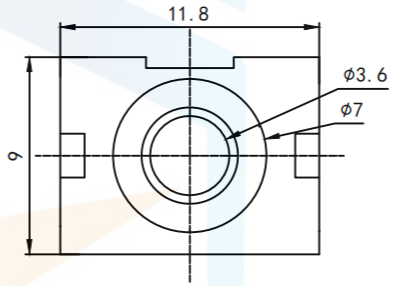

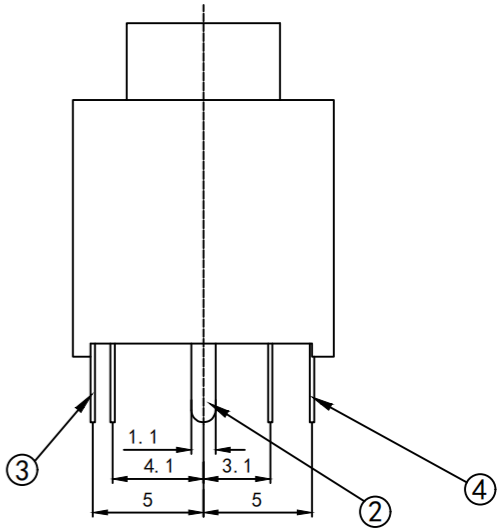

SCHEMATIC

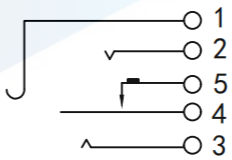

Main technical performance

1. Rated electrical load: 30V 0.5A;
2. Contact resistance: <0.03Ω,
3. Absolute edge resistance: >100MΩ;
4. Withstand voltage: AC500V (50Iz)min;
5. Insertion and withdrawal force: 3-15N,
6. Life: >5000 times

Product requirements:

1. Plastic base does not allow obvious flash; To shrink; Lacerated; Color difference and other bad.
2. No rust on the surface of the hardware; Electroplating abnormalities such as yellow and black spots.
3. The metal pin position has no obvious burrs and is loose, which should not hinder the installation of P.C.B.
4. No linear tolerance:

0.0-10. 0mm ±0.10mm
10.0-20. 0mm±0.15mm
20.0-50. 0mm±0.20mm

TOLERANCE	
X.XXX	±0.05
X.XX	±0.15
X.X	±0.20
X.	±0.30
ANGLE	±5.0°

PROTECTON

东莞市恒祺电子科技有限公司
Dongguan Hengqi Electronic Technology Co., Ltd

https://www.hq-dz.com phone:15812872448

TITLE: 耳机插座

PART NO:PJ-395

DRAWING NO:14.1*11.8*9

DRAWN:		DATE:	18-10-08	UNIT: mm
CHECKED:		DATE:	18-10-08	SCALE: FULL
APPROVED:		DATE:	18-10-08	SIZE: A4